From Buzzword to Battlefield

The Cybersecurity Challenges of Smart Cities

$ whoami

Marina Bochenkova

DFIR

cats

COMPUTER EMERGENCY
RESPONSE TEAM
VOOR DE ZORG

BSIDES
AMSTERDAM

a smart city is ???

a smart city is

an urban territory

that uses ICT and OT

internet
networks
databases

sensors
actuators
OT / IoT

cloud
apps
etc…

+

stakeholder partnerships

local & national government
private companies
academic institutions
community organizations
individuals

to digitize and improve its functioning

governance
operations
economy
citizen involvement
sustainability
quality of life

Pete the terrorist

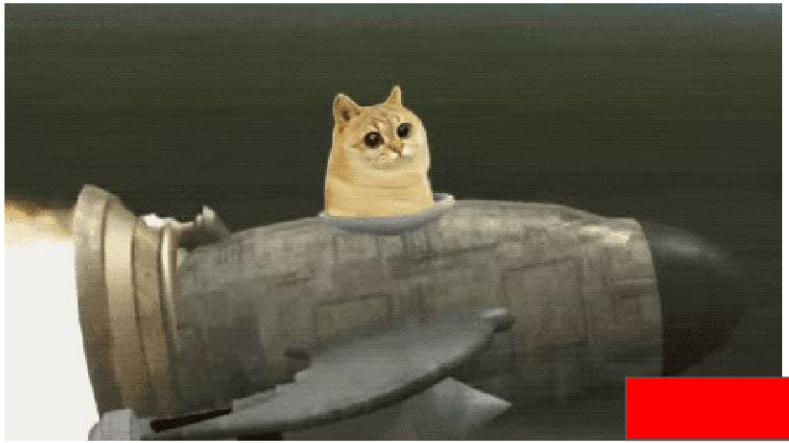

Stadt Bern

3D-MODELL
AERIA
KARTEN
Change to mobile versionSource
Source: Geodaten City of Bern

3D-MODELL
AERIA
KARTEN
Change to mobile versionSource
Source: Geodaten City of Bern

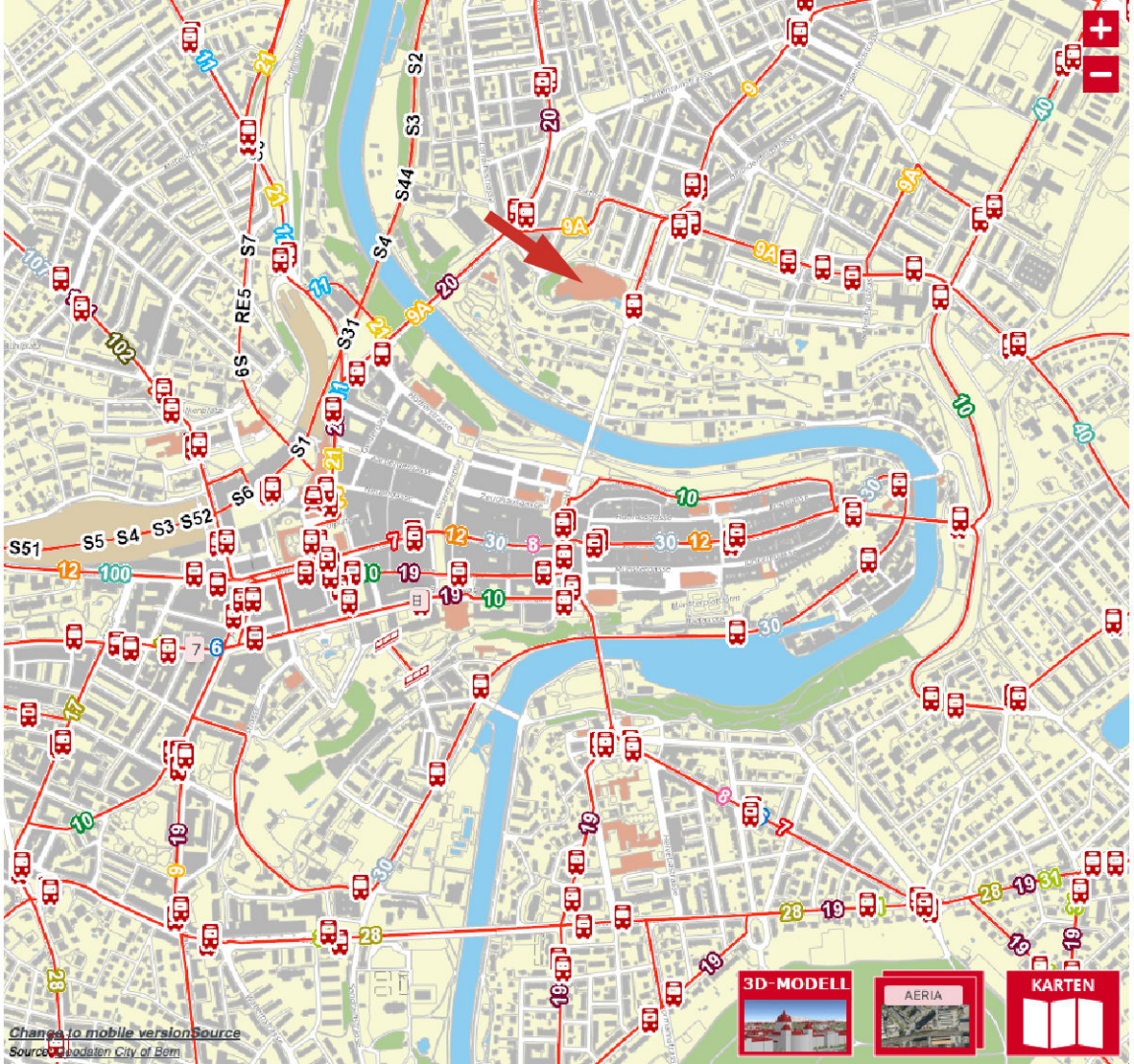
3D-MODELL
AERIA
KARTEN
Change to mobile versionSource
Source: Geodaten City of Bern

3D-MODELL
AERIA
KARTEN
Change to mobile version
Source: Geodaten City of Bern

Stadtbäume im Quartier *

- Acer (Mape)
- Lilia (Linde,
- Aesculus (Red Chestnut)
- Platanus (plane tree)
- Quercus (oak)
- Carpinus (hornbee)
- Pinus (Pifer)
- Fraxinus (Ash)
- Betula (birch)
- Prunus (plum tree)

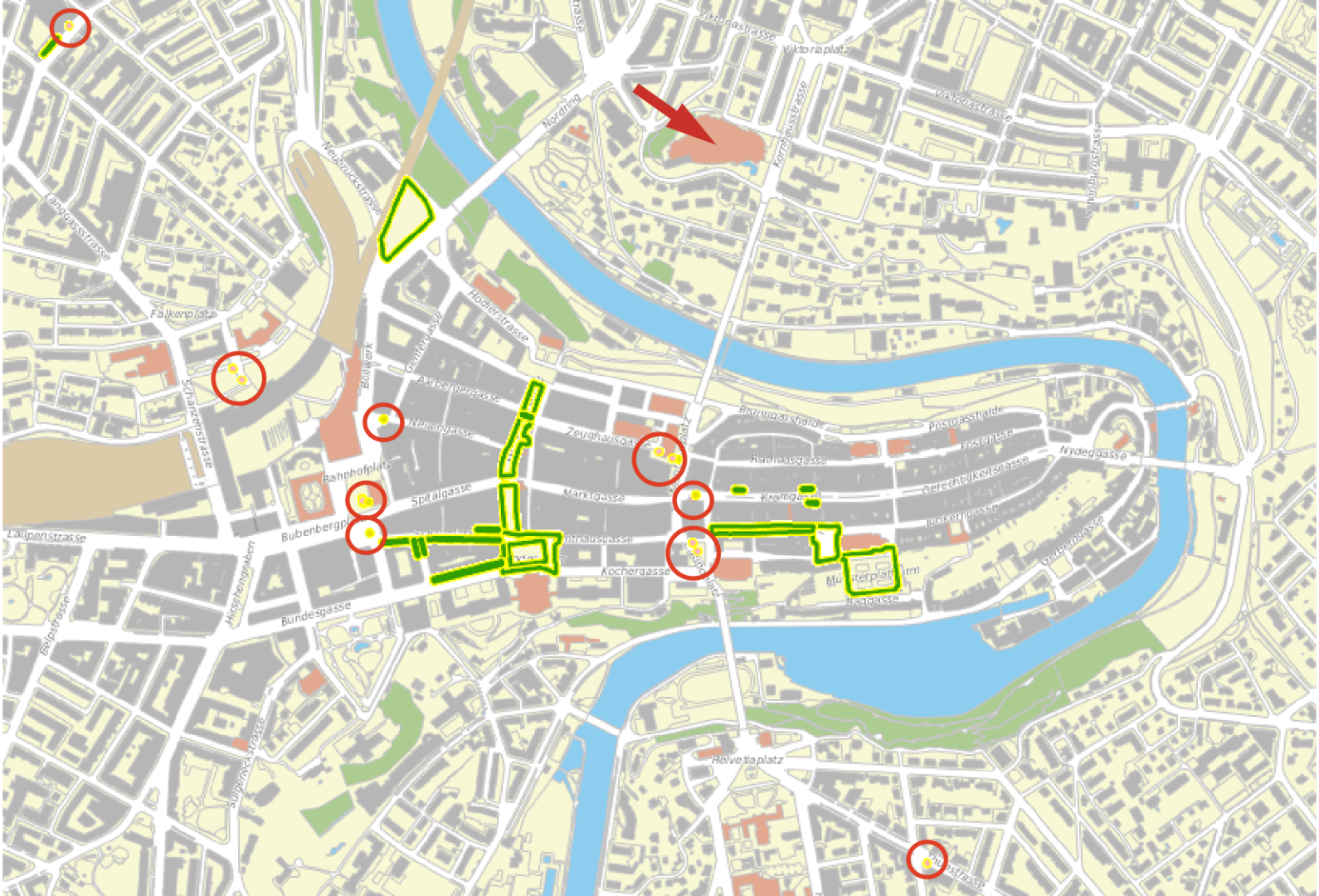

Viktoriastrasse
Viktoriaplatz
Nordring
Neubrückstrasse
Langgassstrasse
Falkenplatz
Schanzenstrasse
Bollwerk
Hodlerstrasse
Aarbergergasse
Zeughausgasse
Bahnhofplatz
Spitalgasse
Marktgasse
Bubenbergplatz
Laupenstrasse
Kochergasse
Bundesgasse
Hirschengraben
Belpstrasse
Sulgeneckstrasse
Helvetiaplatz
Bahnhofstrasse
Nydeggasse
Gerechtigkeitsstrasse
Pulverhausgasse
Pulverhausstrasse
Kramgasse
Gerberngasse

3D-MODELL
AERIA
KARTEN
Change to mobile versionSource
Source: Geodaten City of Bern, ewb

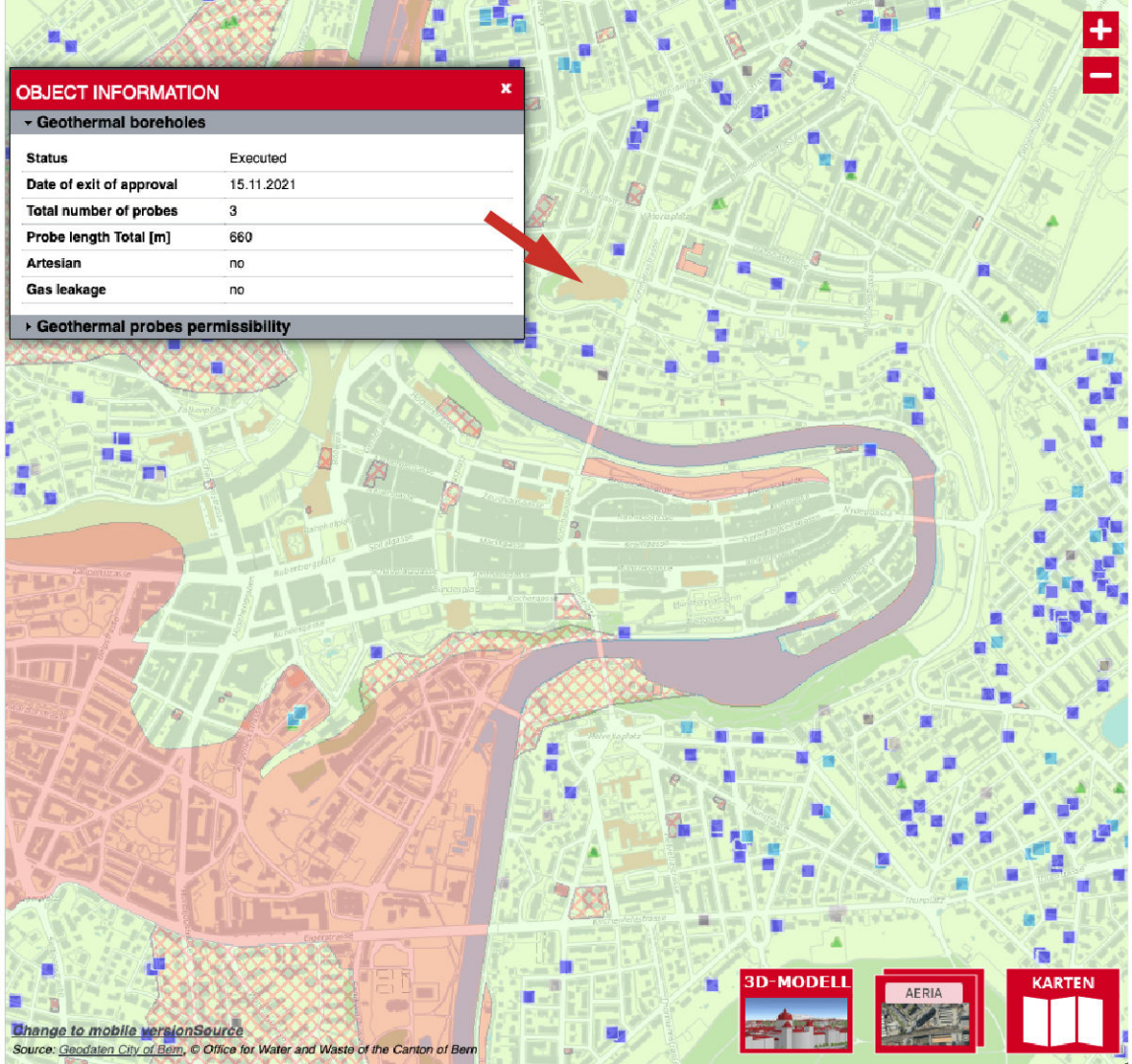
OBJECT INFORMATION
Geothermal boreholes
Status Executed
Date of exit of approval 15.11.2021
Total number of probes 3
Probe length Total [m] 660
Artesian no
Gas leakage no
Geothermal probes permissibility
Change to mobile versionSource
Source: Geodaten City of Bern, © Office for Water and Waste of the Canton of Bern
3D-MODELL
AERIA
KARTEN

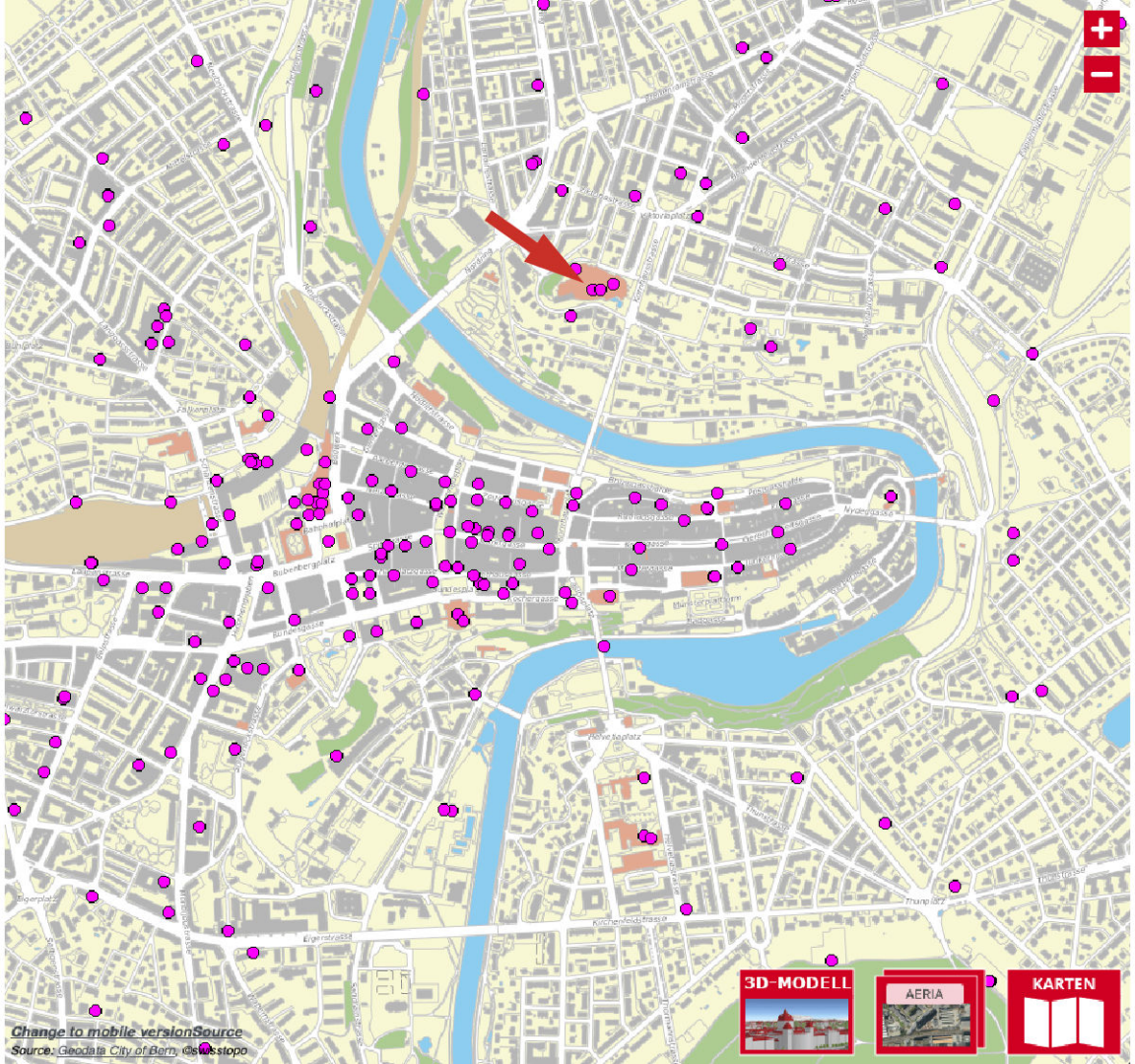
3D-MODELL
AERIA
KARTEN
Change to mobile versionSource
Source: Geodata City of Bern, ©swisstopo

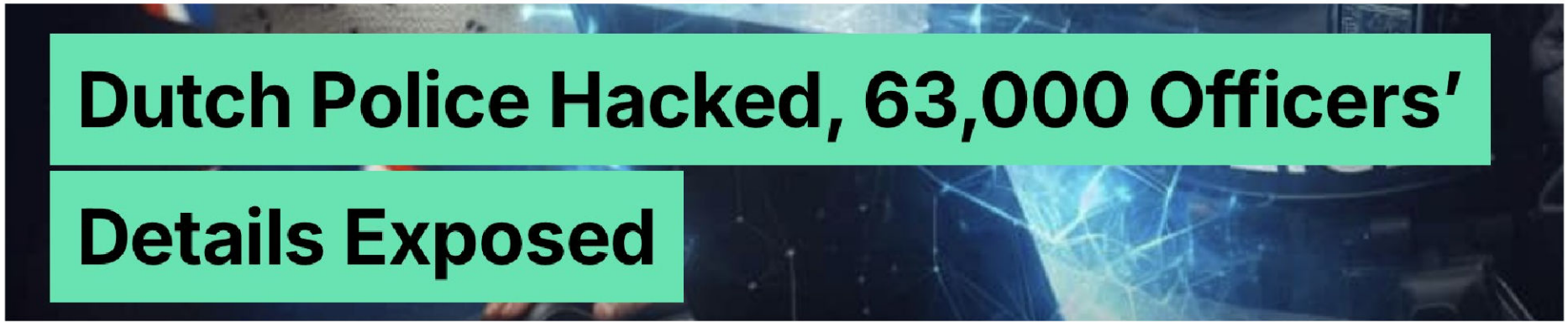
Dutch Police Hacked, 63,000 Officers'
Details Exposed

Personal data stolen from Dutch coronavirus track-and-trace programme

Data of thousands of Dutch citizens leaked from government Covid-19 systems

COVID Test Data Breach: 1.3 Million Patient Records Exposed Online

Aufbau-Beispiel
47558-7856840

Report suggests TVs are more vulnerable to cyber-attack than other smart devices

Millions of Web Camera and Baby Monitor Feeds Are Exposed

Kaiji - a new strain of IoT malware seizing control and launching DDoS attacks

Privacylek in slimme meter

Door RTL Z · 29 januari 2015 · Aangepast: 6 september 2015

RTL Nieuws

gifbin.com

GIFAK.NET

Computer glitch nearly drowns Amsterdam, utility worker saves the day

Computer
the day

y worker saves

a smart city is

an urban territory

that uses ICT and OT

internet
networks
databases

sensors
actuators
OT / IoT

cloud
apps
etc…

+

stakeholder partnerships

local & national government
private companies
academic institutions
community organizations
individuals

to digitize and improve its functioning

governance
operations
economy
citizen involvement
sustainability
quality of life

SOLAR ELECTRIC

KOSTAL

- Home
- Info
- Login

Smart connections.

PIKO 10 (Sartori)

28/10/2025 07:55
Guest

Home

Power values

Total DC input	1,584.2W
Output power	1,492.2W
Self-consumption	479.8W

Status

Operating status	Feed in (MPP)

LEVRATTE BATIMENT C - ACCUEIL

SITE #1

ECS C.3 N°26

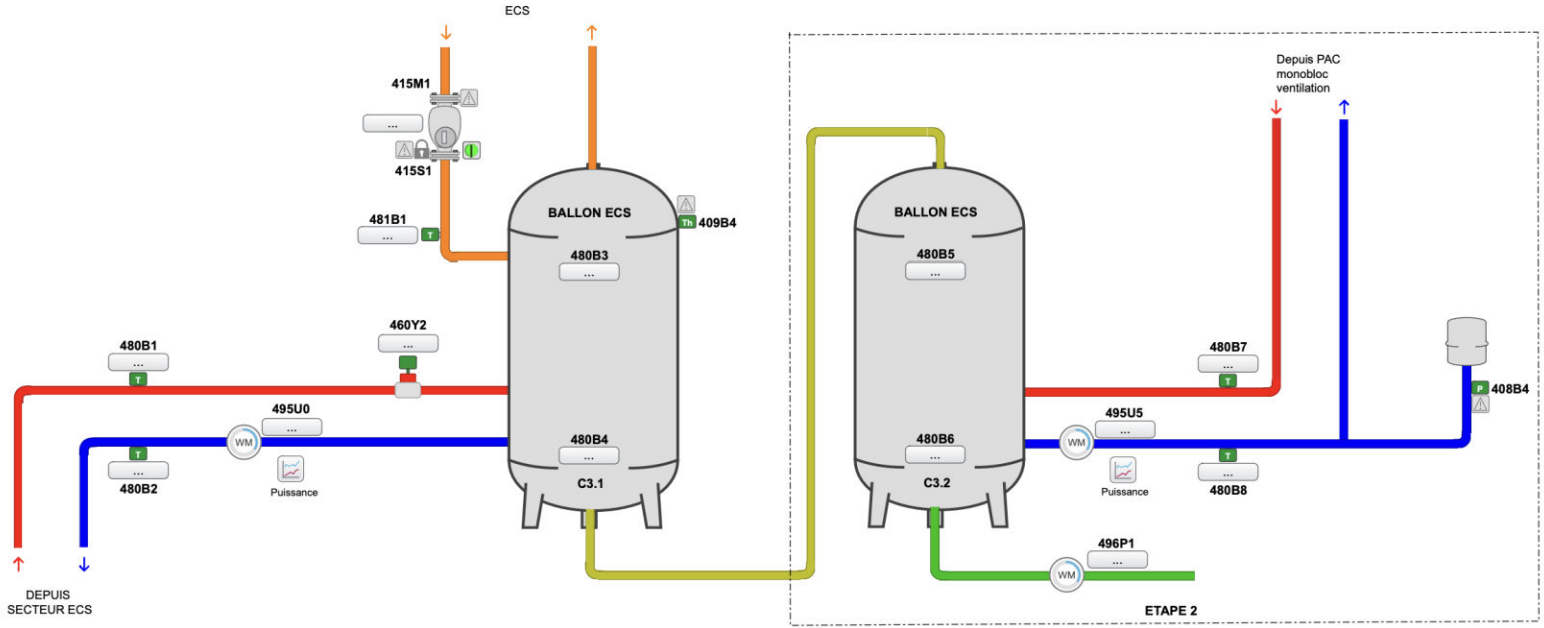

SITE #1

DISTRIBUTION

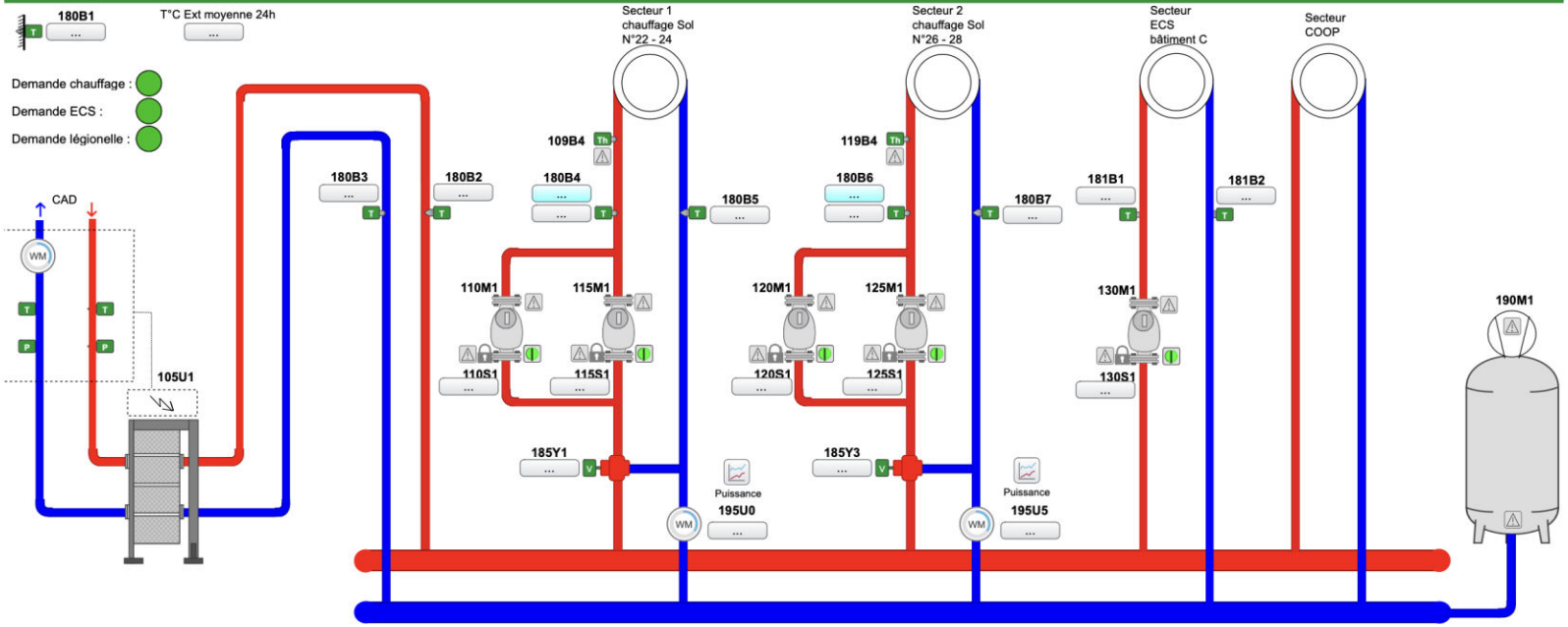

Name	Aktueller Wert	
Ist Wert Vorlauf	40.4	°C
Soll Wert Vorlauf Heizung	40	°C
Aussentemperatur	4.8	°C
Wohnzimmer	21.58	°C

Speichertemperaturen:

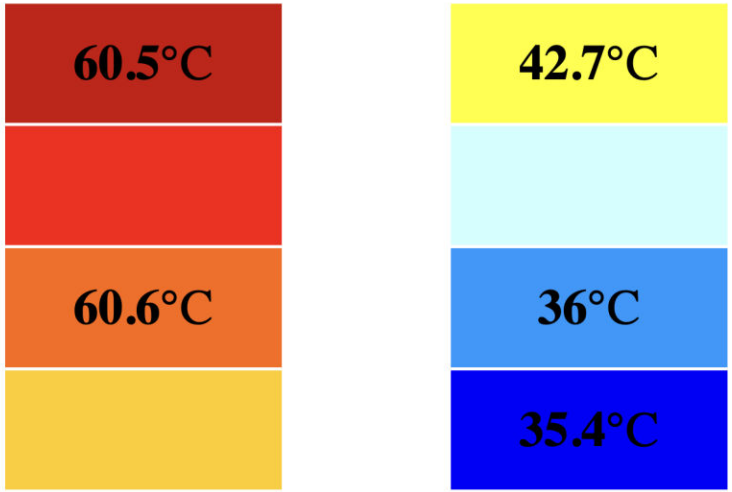

Vorlauftemperatur anpassen:

-2 . °C

Heizkurve anpassen zum Beispiel -4 Sollwert Vorlauf wir um 4° C Kälter

Nachtabsenkung:

10 . °C

Nachtabsenkung anpassen zum Beispiel: 2 Sollwert wird in der nacht von 22.00 bis 4.00 Uhr um 2°Kälter

Aktuelle Uhrzeit:

17 . 10 .

imgflip.com

How Smart Wearables Could Unlock The Potential Of Smart Cities Like Dubai

Chinese state hackers infiltrated thousands of smart devices in the Netherlands

'Smart' home devices used as weapons in website attack

Cybersecurity Best Practices for Smart Cities

Publication: April 19, 2023

United States Cybersecurity and Infrastructure Security Agency
United States National Security Agency
United States Federal Bureau of Investigation
United Kingdom National Cyber Security Centre
Australian Cyber Security Centre
Canadian Centre for Cyber Security
New Zealand National Cyber Security Centre

U.S. DEPARTMENT OF ENERGY | *Office of* Cybersecurity, Energy Security, and Emergency Response

Cyber-Informed Engineering

National Cyber-Informed Engineering Strategy

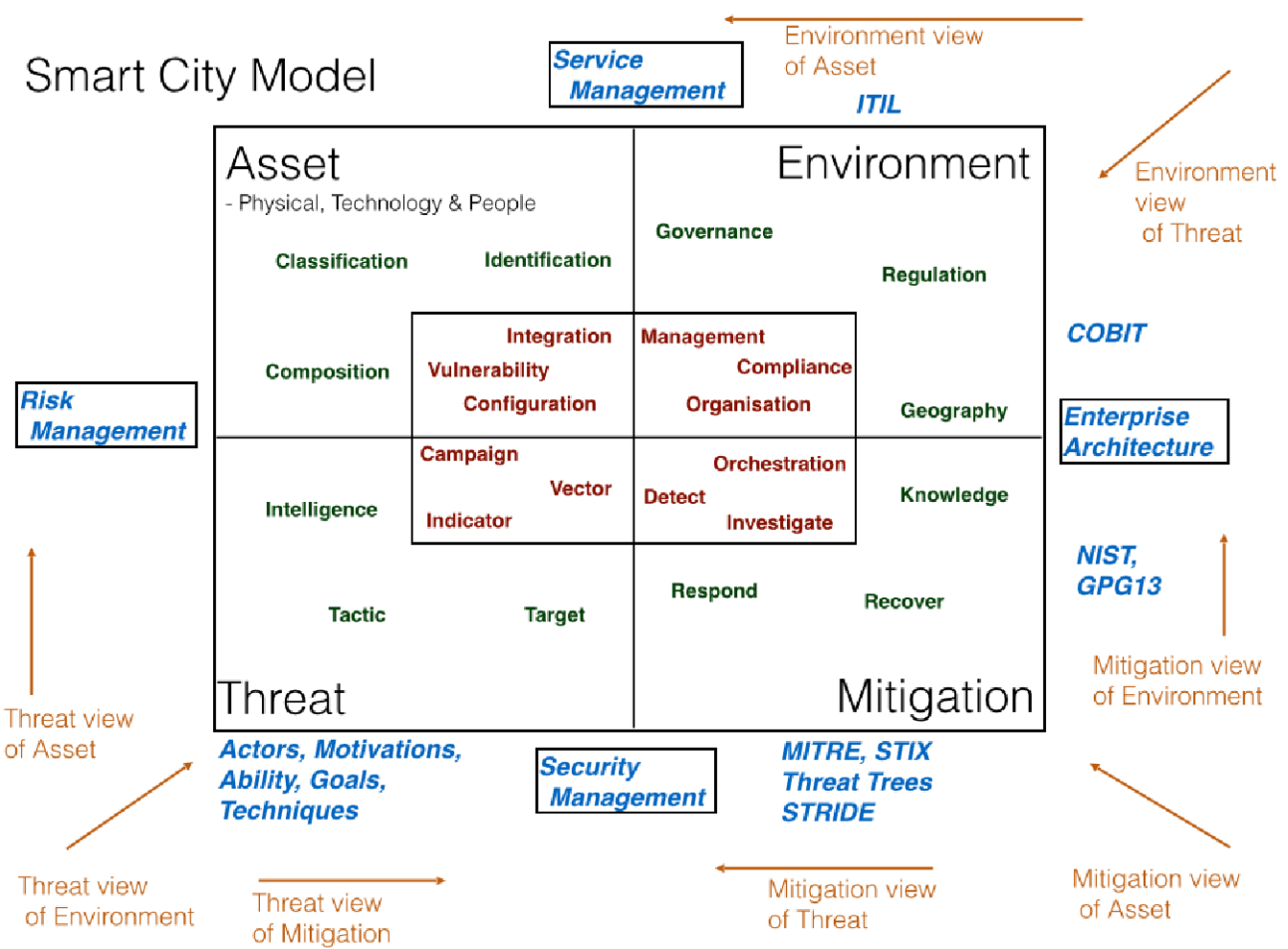

https://smartcitysecurity.net/

The diagnosis is in: Mobile health apps are bad for your privacy

Sensitive data is moving through Android healthcare apps without adequate protection. Researchers found that many transmit information without encryption, store files without safeguards, or share it through third-party components.

Stichting
Cyberbrein.nl

EU delays 'chat control' law over privacy concerns

Rosie Birchard in Brussels | **Beatrice von Braunschweig**
10/14/2025

A proposed EU law designed to scan online communication to keep kids safe from online sexual predators has been shelved over worries it could undermine fundamental privacy rights.

LinkedIn (I promise)

Marina Bochenkova

THANK YOU